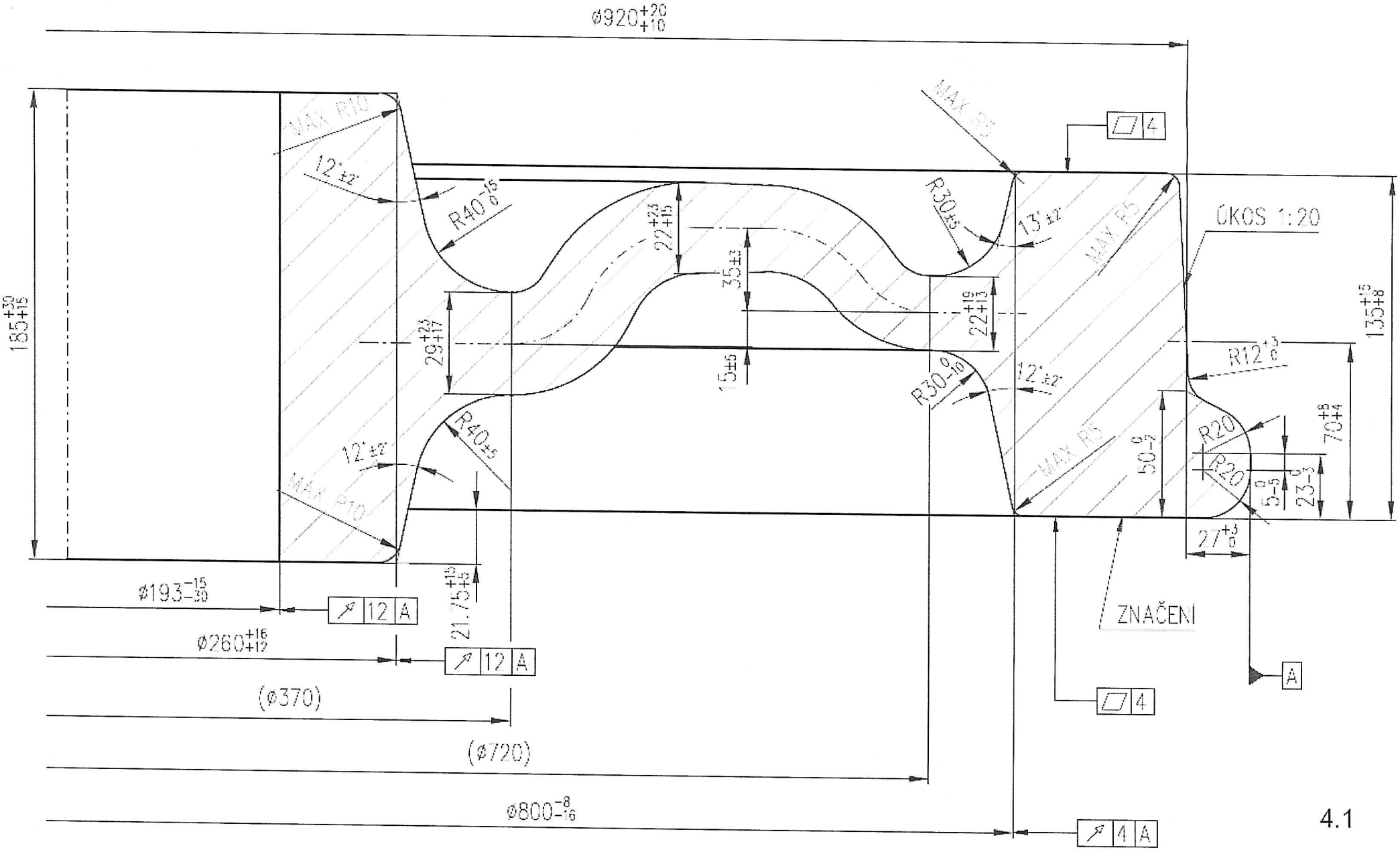
ø920+20 +10
185+30 +15
MAX R10
12' ±2'
R40-15 0
27+23 +15
35±3
29+23 +17
15±5
R40±5
12' ±2'
MAX R10
21,75+15 +5
ø193-15 -30
12 A
ø260+16 +12
12 A
(ø370)
(ø720)
ø800-8 -16
4 A
MAX R5
R30±5
13' ±2'
MAX R5
22+19 +13
R30-0 -16
12' ±2'
MAX R5
4
ÚKOS 1:20
135+15 +8
R12+3 0
50-0 -5
R20
R20
5-0 -5
23-0 -5
70+8 +4
27+3 0
ZNAČENÍ
A
4

4.1

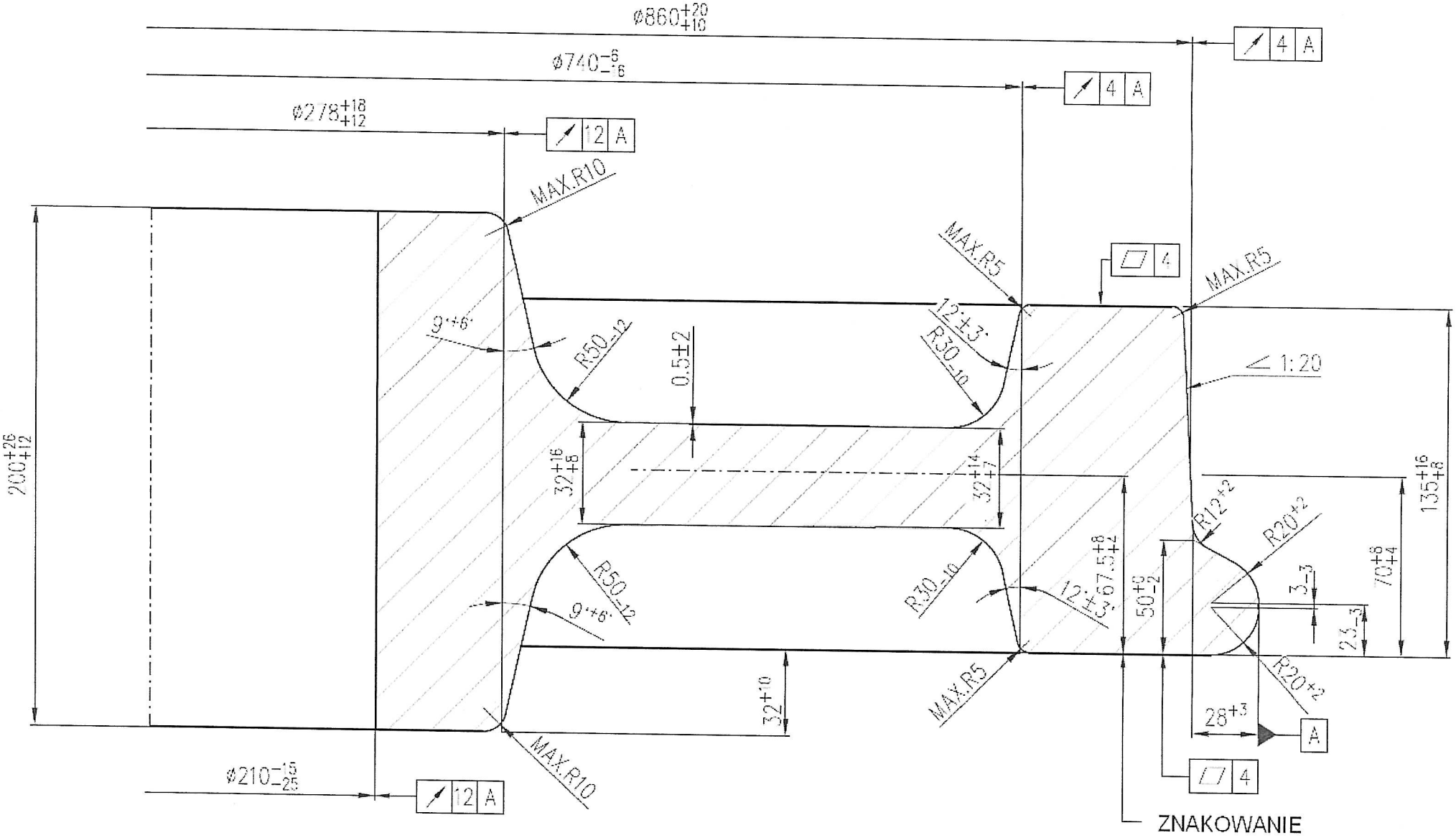
ø860 +20 +10
ø740 −6 −6
ø278 +18 +12
ø210 −15 −25
200 +26 +12
MAX.R10
MAX.R5
9°+6°
R50−12
0.5±2
12°±3°
R30−10
32 +16 +8
32 +14 +7
∠ 1:20
R12+2
R20+2
135 +16 +8
70 +8 +4
3−3
23−3
50 +8 −2
67.5 +8 +2
28+3
32+10
A
ZNAKOWANIE

4.2

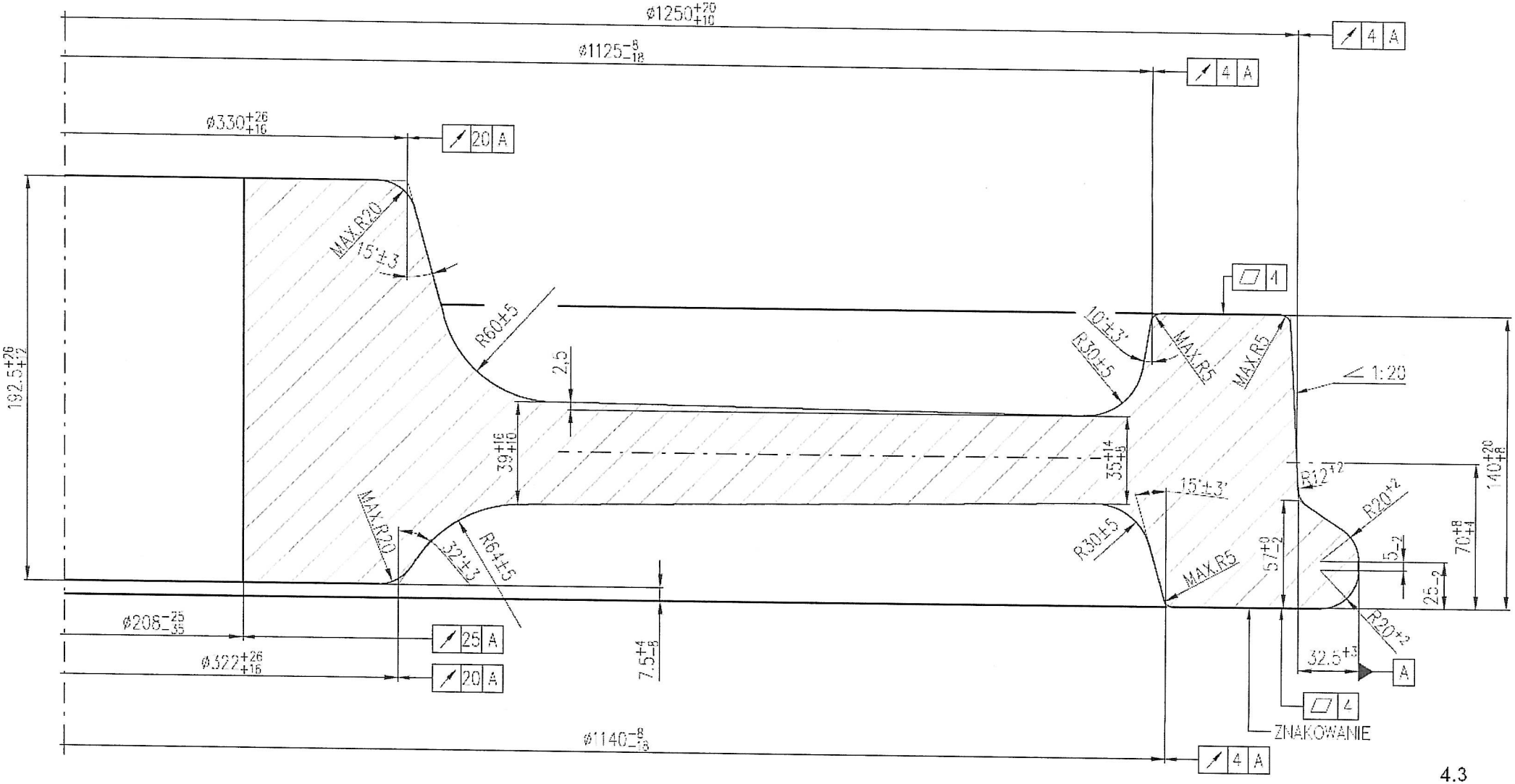
ø1250+20 +10
ø1125-8 -18
ø330+26 +16
192.5+26 +2
MAX.R20
15'±3
R60±5
2.5
39+16 +10
MAX.R20
32'±3
R64±5
ø208-25 -35
ø322+26 +16
7.5+4 -8
ø1140-8 -18
10'±3'
R30±5
MAX.R5
MAX.R5
∠ 1:20
35+14 +5
15'±3'
R30±5
MAX.R5
R12+2
R20+2
57+8 -2
5-2
25-2
70+8 +4
140+20 +8
R20+2
32.5+3
A
ZNAKOWANIE
4
A
20
A
25
A
20
A
4
A
4
A
4
A
4
A

4.3

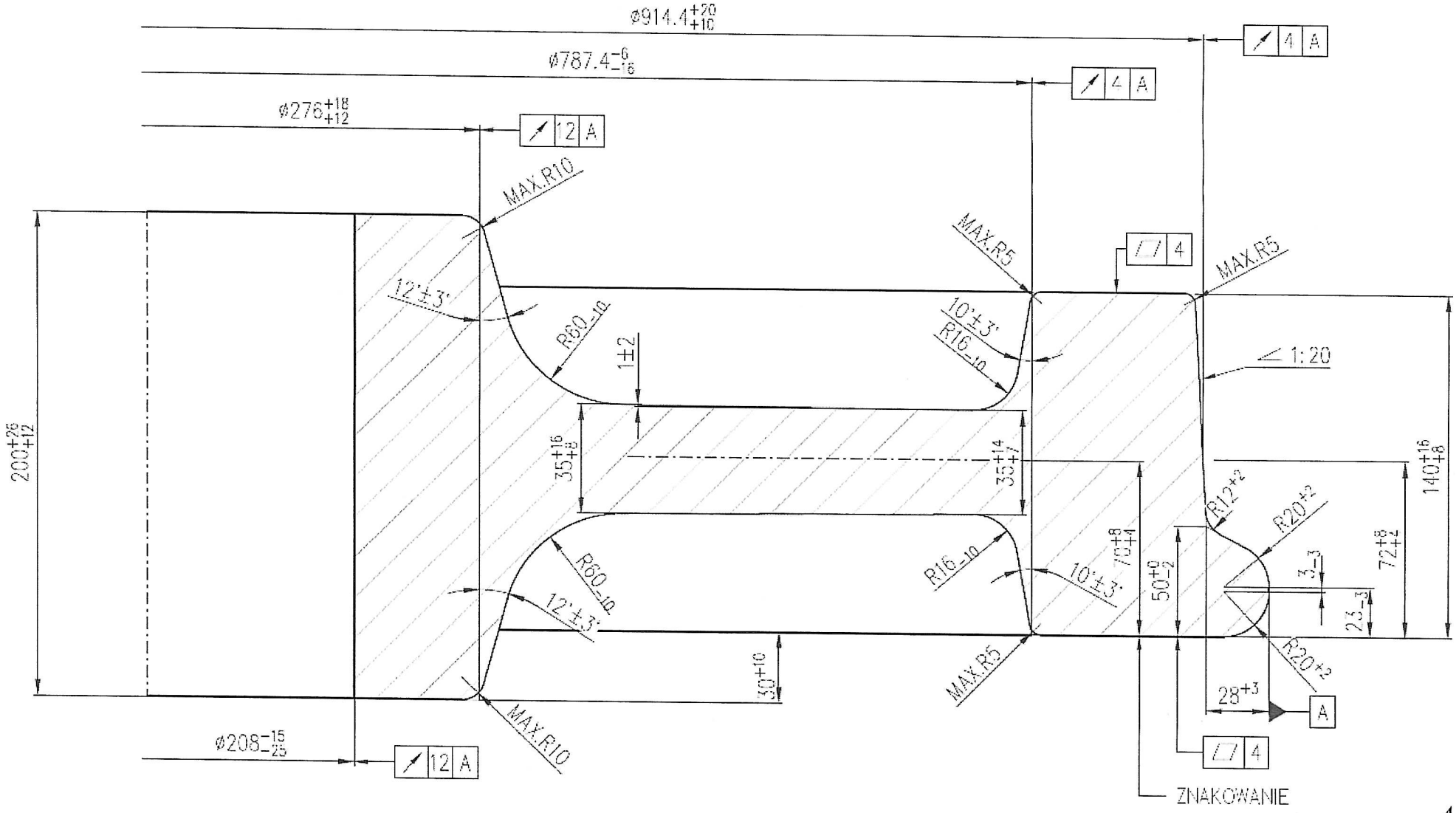
ø914.4 +20 +10
ø787.4 -6 -16
ø276 +18 +12
ø208 -15 -25
200 +25 +12
MAX.R10
MAX.R5
12'±3'
R60 -10
1±2
10'±3'
R16 -10
35 +16 +8
35 +14 +7
∠ 1:20
R12 +2
R20 +2
140 +16 +8
72 +8 +2
50 +0 -2
70 +8 +4
3 -3
23 -3
30 +10
28 +3
A
ZNAKOWANIE

4.4

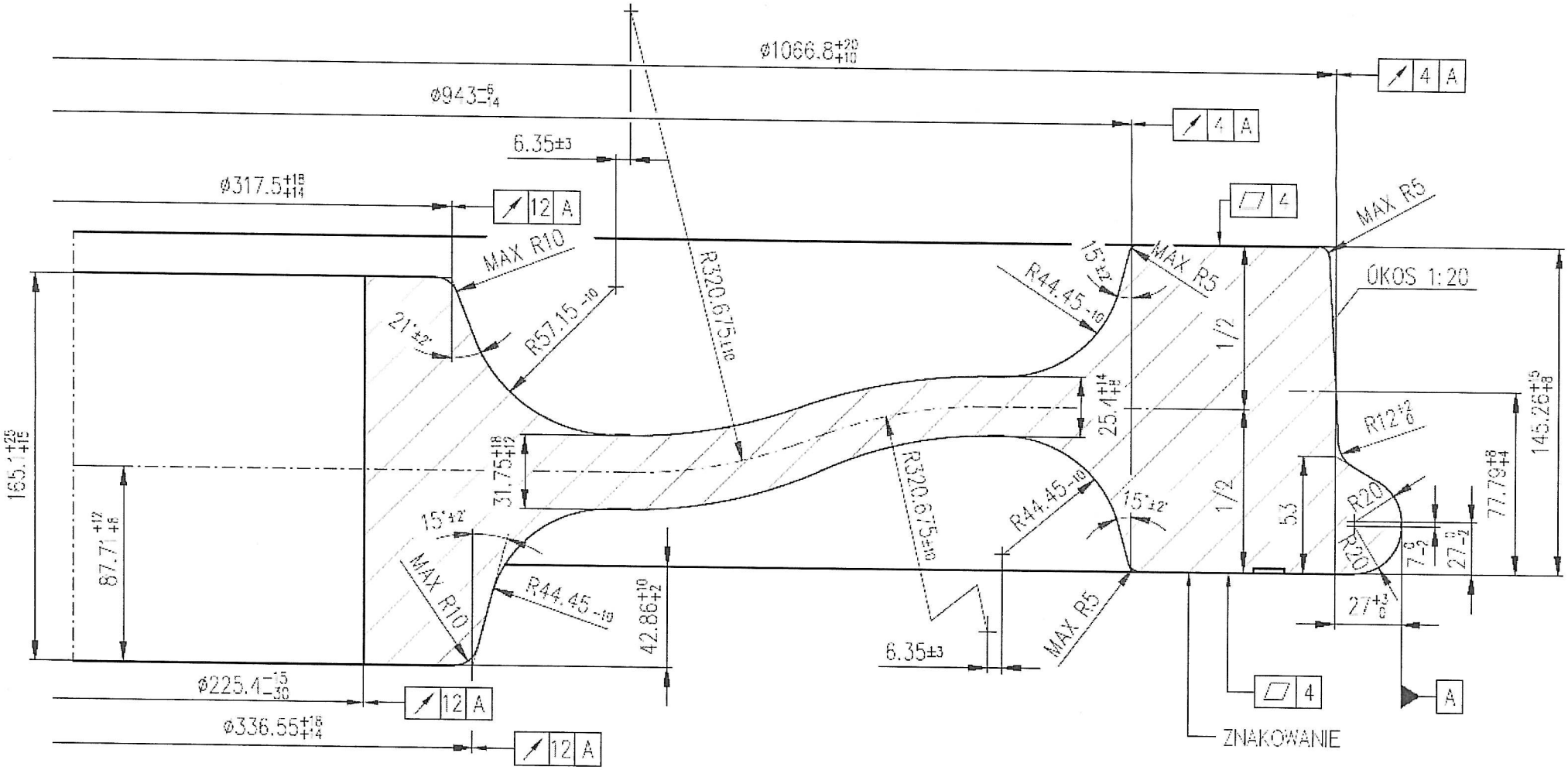
ø1066.8
ø943
6.35±3
ø317.5
MAX R10
R57.15
21°±2°
R320.675±10
15°±2°
R44.45
MAX R5
1/2
25.4
31.75
R320.675±10
R44.45
15°±2°
1/2
53
R12
R20
R20
77.79
145.26
87.7
42.86
6.35±3
MAX R5
ø225.4
ø336.55
ZNAKOWANIE
ÚKOS 1:20
A

4.5

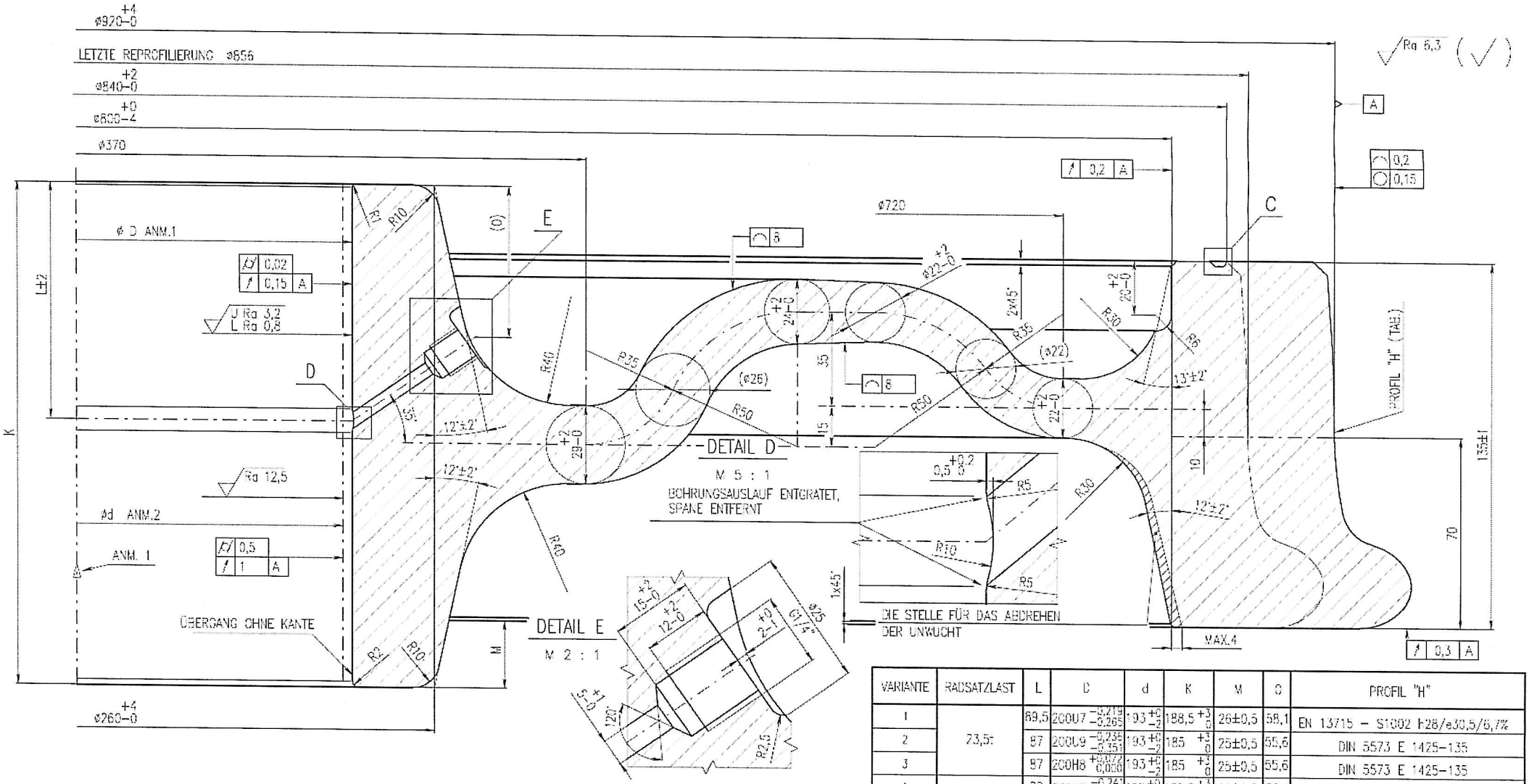

VARIANTE	RADSATZLAST	L	D	d	K	M	C	PROFIL "H"
1	23,5t	89,5	200U7 $^{-0,219}_{-0,265}$	193 $^{+0}_{-2}$	188,5 $^{+3}_{0}$	26±0,5	58,1	EN 13715 – S1002 h28/e30,5/6,7%
2		87	200U9 $^{-0,235}_{-0,351}$	193 $^{+0}_{-2}$	185 $^{+3}_{0}$	25±0,5	55,6	DIN 5573 E 1425–135
3		87	200H8 $^{+0,072}_{0,000}$	193 $^{+0}_{-2}$	185 $^{+3}_{0}$	25±0,5	55,6	DIN 5573 E 1425–135
4	25t	88	205U7 $^{-0,24}_{-0,287}$	198 $^{+0}_{-2}$	188,5 $^{+3}_{0}$	26±0,5	58,1	DIN 5573 E 1425–135
5		85	205U9 $^{-0,256}_{-0,373}$	193 $^{+0}_{-2}$	185 $^{+3}_{0}$	25±0,5	55,6	DIN 5573 E 1425–135
6		85	205H8 $^{+0,072}_{0,000}$	193 $^{+0}_{-2}$	185 $^{+3}_{0}$	25±0,5	55,6	DIN 5573 E 1425–135
7		88	205U7 $^{-0,24}_{-0,287}$	198 $^{+0}_{-2}$	188,5 $^{+3}_{0}$	26±0,5	58,1	EN 13715 – S1002 h28/e30,5/6,7%
8		88	202U7 $^{-0,24}_{-0,287}$	195 $^{+0}_{-2}$	188,5 $^{+3}_{0}$	26±0,5	58,1	EN 13715 – S1002 h28/e30,5/6,7%

1. ZULÄSSIGE KONIZITÄT DER NABENBOHRUNG IM TOLERANZBEREICH UNTER DER BEDINGUNG, DAß DER GRÖSSERE DURCHMESSER AUF DER RADINNENSEITE IST.
2. DIE ZEICHNUNG GILT AUCH FÜR DIE LIEFERUNG VON VOLLRÄDER MIT VORGEDREHTER NABENBOHRUNG ø193–2, MASSE 347,5kg; MIT VORGEDREHTER NABENBOHRUNG ø198–2, MASSE 345kg, MIT VORGEDREHTER NABENBOHRUNG ø198–2, MASSE 346kg.
3. DIE VOLLRÄDER WERDEN STATISCH AUSGEWUCHTET AUF DEN WERT VON ≤125 gm (E3).
4. KENNZEICHNUNG NUMMER DB–TL 918 277.
5. TECHNISCHE LIEFERBEDINGUNGEN GEMÄß EN 13262 CATEGORY 2 UND BN 918 277.
6. RAD IST FÜR RADSATZ DER GÜTERWAGEN ZULÄSSIGE RADSATZLAST 23,5 t (VARIANTE 1–3) UND 25t (VARIANTE 4–8).

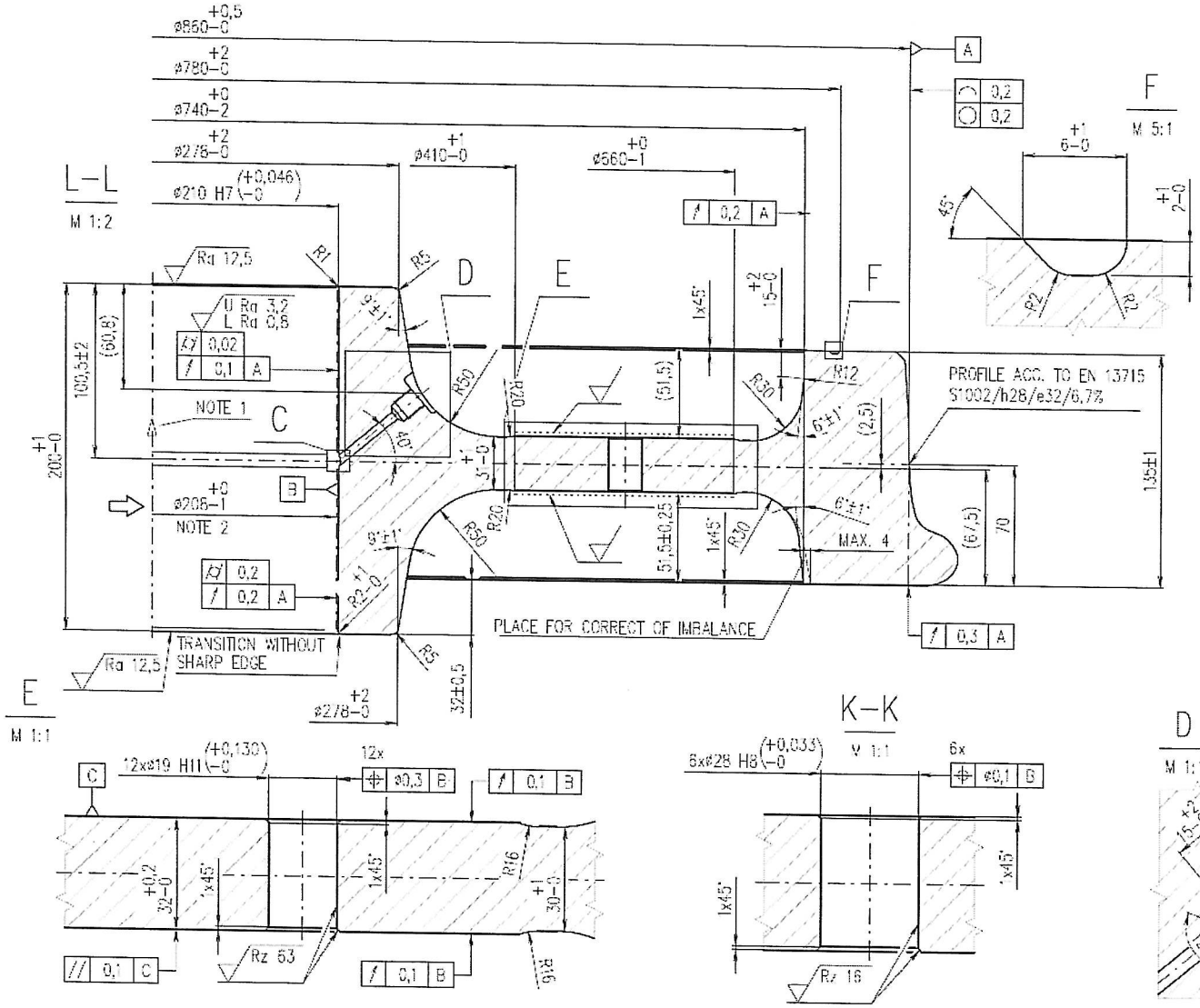

1. ANY SLIGHT TAPER WITHIN THE PERMITTED TOLERANCE MAY BE ON THE CONDITION THAT THE LARGER DIAMETER IS AT THE INBOARD SIDE OF THE HUB.
2. THE DRAWING IS ALSO VALID FOR DELIVERY OF SEPARATE SOLID WHEELS WITH ROUGH BORE ø208–1, ROUGHNESS Ra 12,5 µm, WEIGHT 334 kg.
3. MAXIMUM STATIC IMBALANCE IS 125 gm (E3).
4. THE SOLID WHEEL IS SPECIFIED FOR LOAD OF AXLE 18,812 t.
5. DESIGN ACCORDING TO EN 13262.
6. CLASS OF STEEL C ACCORDING TO A.A.R. M 107, LATEST REVISION INCLUDING ALL FOLLOWING CIRCULAR LETTERS.
7. WHEEL WEB SHALL NOT BE SHOT PEENED.

Ra 6.3 (✓) ▽ = Rz 10

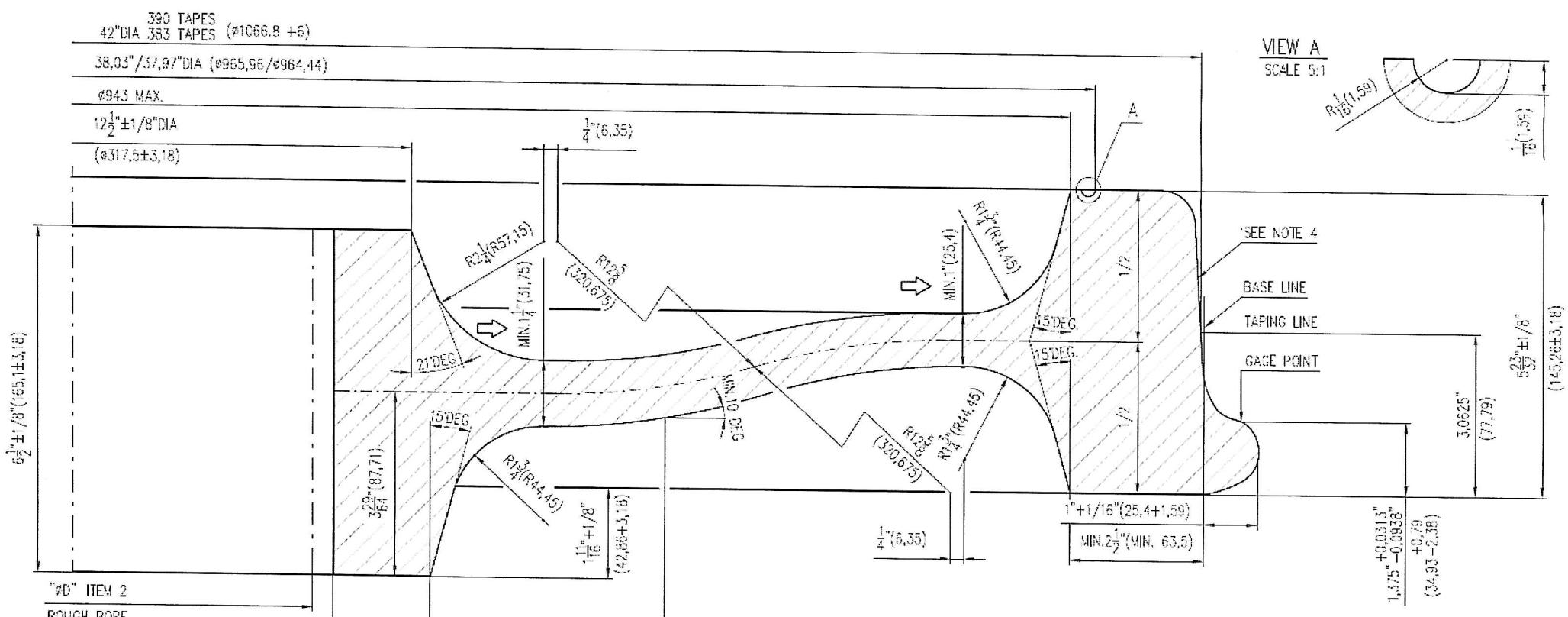

NOTES

1. MATERIAL: WHEEL P3 – CLASS B PER A.A.R. M-107, LATEST REVISION.
   WHEEL P34 – CLASS C PER A.A.R. M-107, LATEST REVISION.
2. DESIGN MADE BY FEA PER A.A.R. S-660, LATEST REVISION.
3. COLD STAMPING ACCORDING TO A.A.R. M-107, REVISED 2013, FIGURE B.5, PAGE G-46. DRAWING OF WHEEL MARKING D11-3-01182.
4. PROFILE ACCORDING TO A.A.R. M-107, REVISED 2013, A.A.R.-1B WIDE FLANGE, FIGURE B.11, PAGE G-53.
5. SURFACE ROUGHNESS OF TREAD PROFILE AND RIM FACES PRIOR TO FINAL SHOT PEENING SHALL BE LESS THAN 350 MICROINCHES (Ra 6,3 µm). OTHER WHEEL AREAS SHALL HAVE SURFACE ROUGHNESS PRIOR TO FINAL SHOT PEENING LESS THAN 500 MICROINCHES (Ra 12,5 µm).
6. WHEEL PLATE AREA SHALL BE SHOT PEENED IN ACCORDANCE WITH A.A.R. M-107, LATEST REVISION AFTER MACHINING. SOME AREAS OF RIM AND HUB CAN BE SHOT PEENED TOO.
7. WHEEL SHALL BE ULTRASONICALLY TESTED AND MAGNETIC PARTICLE INSPECTED AFTER MACHINING IN ACCORDANCE WITH A.A.R. M-107, LATEST REVISION.
8. ALL DIMENSIONS ARE IN IN. AND IN EUROPEAN METRIC STANDARDS (mm).

ITEM	"ØD"	[kg]
1.	$\text{ø}9.625^{+0}_{-0.250}$" [$\text{ø}244.48^{+0}_{-6,35}$]	477
2.	$\text{ø}8.875^{+0}_{-0.250}$" [$\text{ø}225.43^{+0}_{-6,35}$]	489

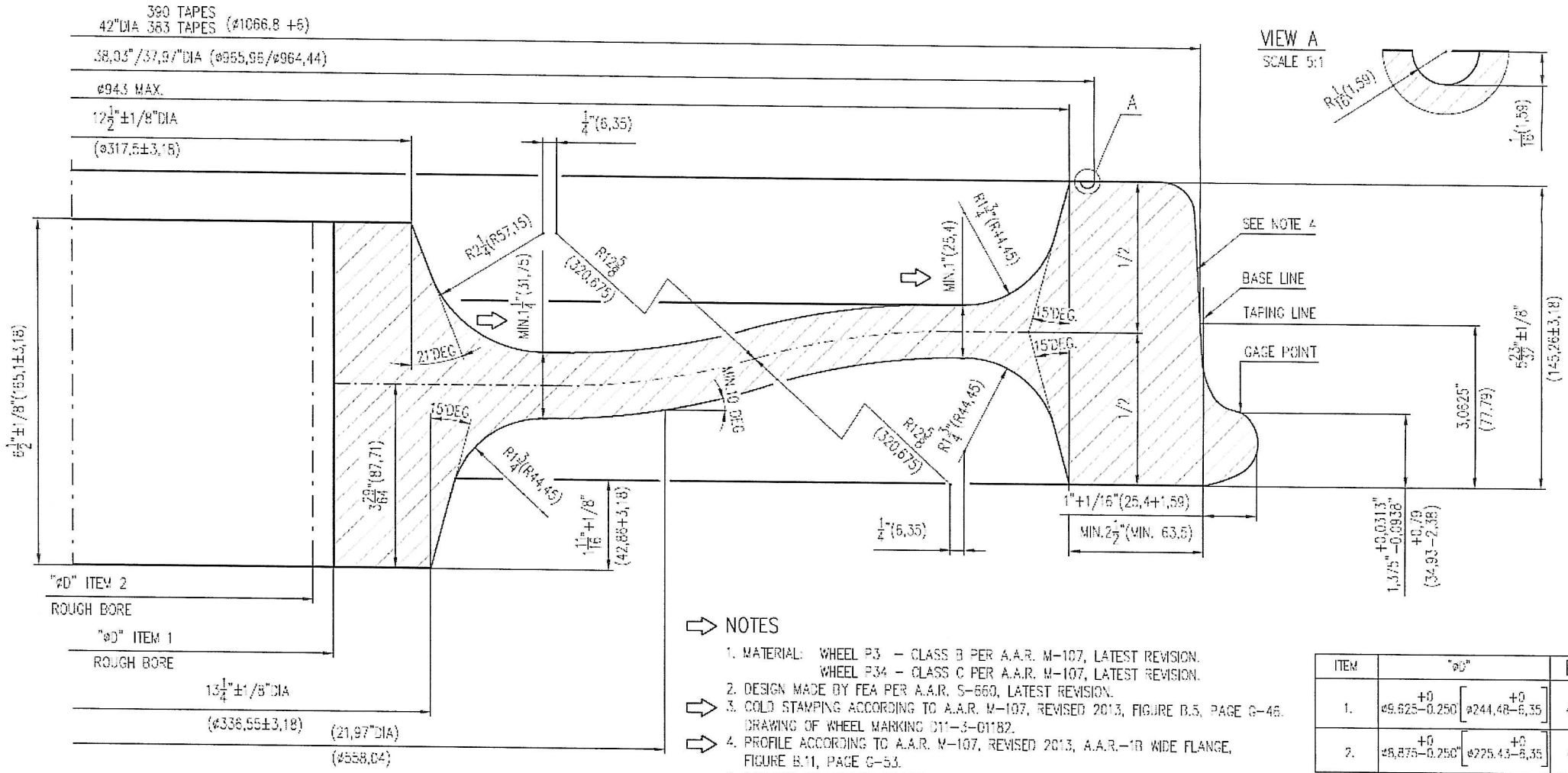

NOTES

1. MATERIAL: WHEEL P3 – CLASS B PER A.A.R. M-107, LATEST REVISION.
   WHEEL P34 – CLASS C PER A.A.R. M-107, LATEST REVISION.
2. DESIGN MADE BY FEA PER A.A.R. S-660, LATEST REVISION.
3. COLD STAMPING ACCORDING TO A.A.R. M-107, REVISED 2013, FIGURE B.5, PAGE G-46. DRAWING OF WHEEL MARKING D11-3-01182.
4. PROFILE ACCORDING TO A.A.R. M-107, REVISED 2013, A.A.R.-1B WIDE FLANGE, FIGURE B.11, PAGE G-53.
5. SURFACE ROUGHNESS OF TREAD PROFILE AND RIM FACES PRIOR TO FINAL SHOT PEENING SHALL BE LESS THAN 350 MICROINCHES (Ra 8,3 µm). OTHER WHEEL AREAS SHALL HAVE SURFACE ROUGHNESS PRIOR TO FINAL SHOT PEENING LESS THAN 500 MICROINCHES (Ra 12,5 µm).
6. WHEEL PLATE AREA SHALL BE SHOT PEENED IN ACCORDANCE WITH A.A.R. M-107, LATEST REVISION AFTER MACHINING. SOME AREAS OF RIM AND HUB CAN BE SHOT PEENED TOO.
7. WHEEL SHALL BE ULTRASONICALLY TESTED AND MAGNETIC PARTICLE INSPECTED AFTER MACHINING IN ACCORDANCE WITH A.A.R. M-107, LATEST REVISION.
8. ALL DIMENSIONS ARE IN IN. AND IN EUROPEAN METRIC STANDARDS (mm).

ITEM	"ØD"	[kg]
1.	ø9,625 +0 −0,250 [ø244,48 +0 −6,35]	477
2.	ø8,875 +0 −0,250" [ø225,43 +0 −6,35]	489

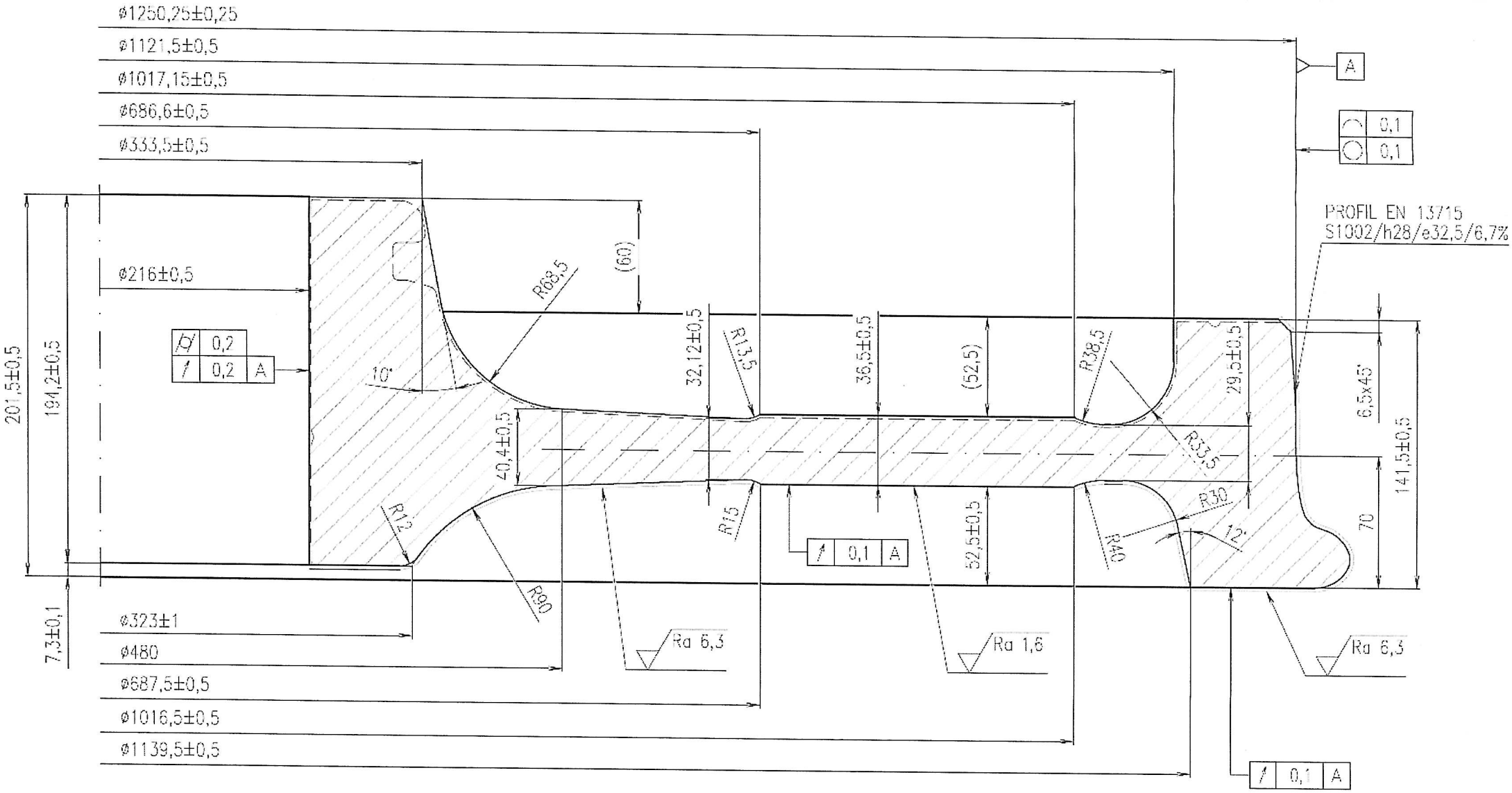

Ra 12,5 ( )

RYSUNEK MIĘDZYOPERACYJNY DLA 1 & 2. OPERACJI
KOŁO DO PRÓB OBRÓBKI WYKOŃCZENIOWEJ

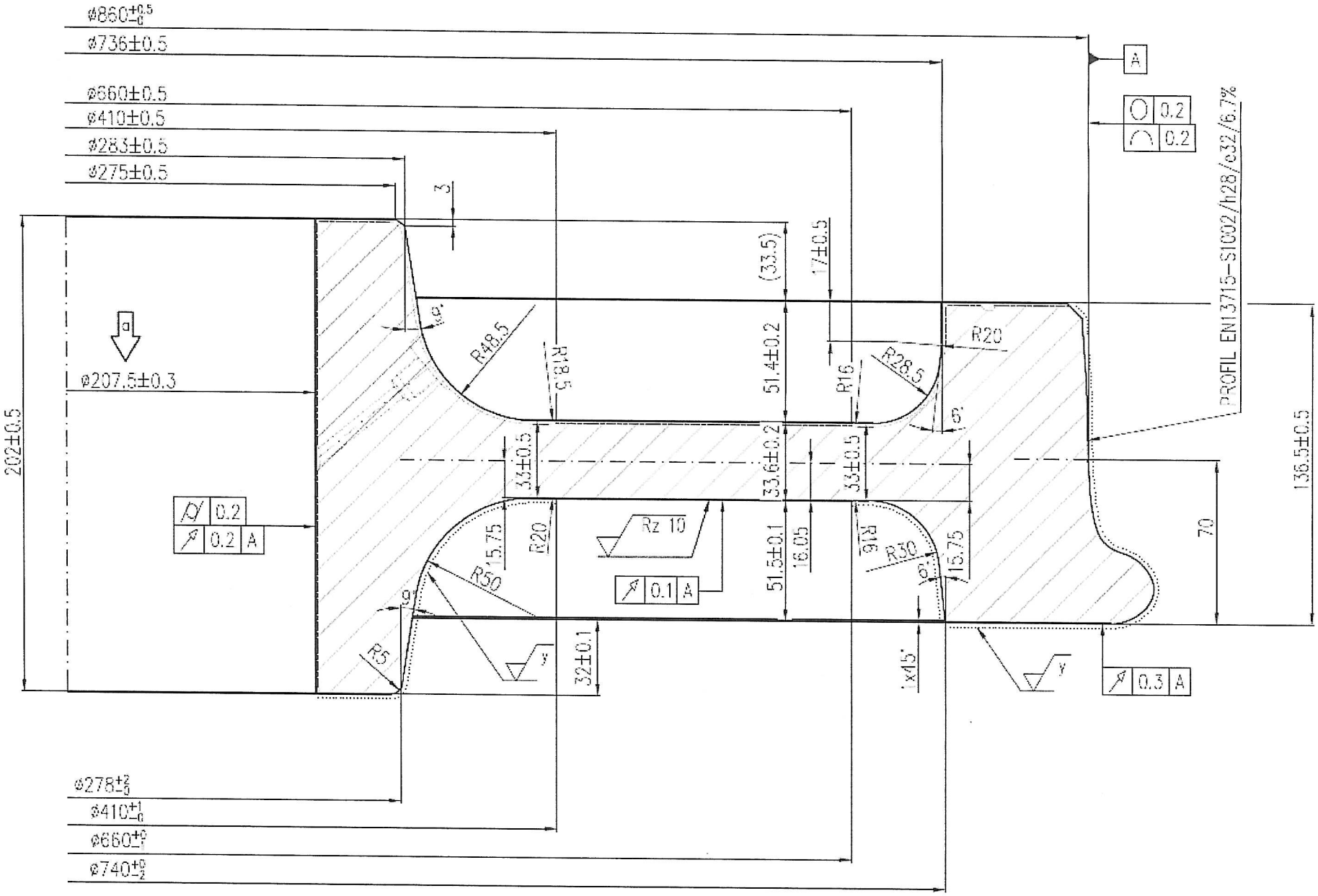

Ra 12.5 ( )

x	= Ra 3.2
y	= Ra 6.3

RYSUNEK MIĘDZYOPERACYJNY DLA 1 & 2 OPERACJI - OBRÓBKA WYKOŃCZENIOWA

4.11